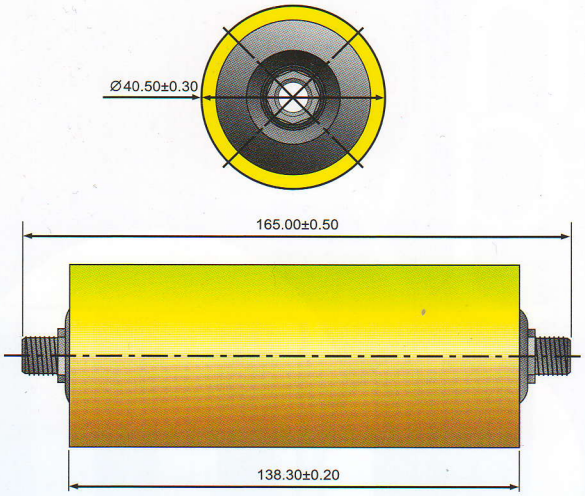

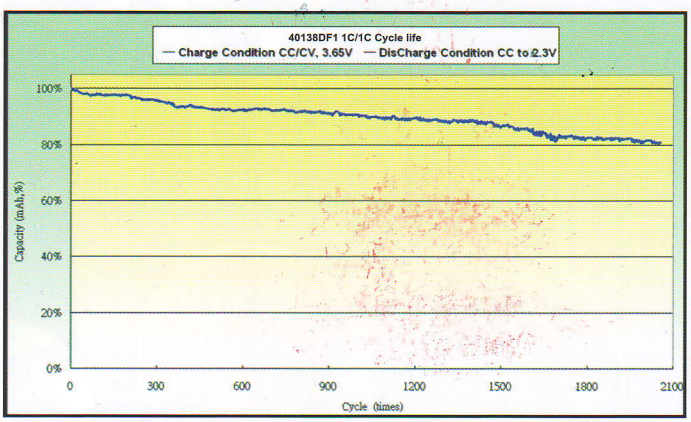

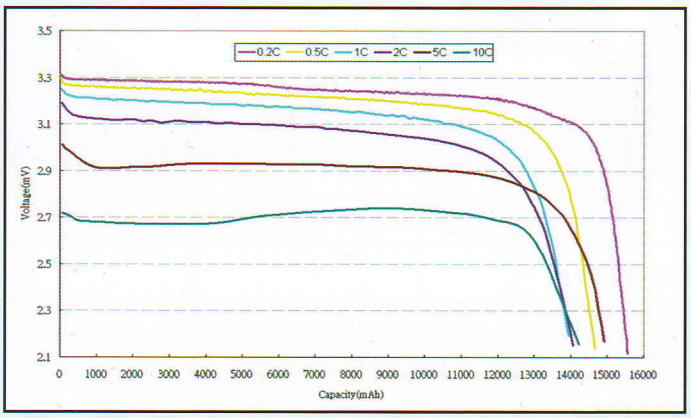

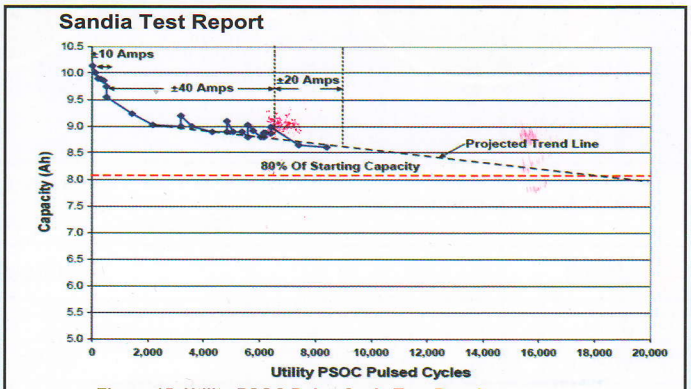

Figure 15. Utility PSOC Pulse Cycle Test Results.

LiFePO4 Battery Cell Spec.					
Physical Characteristics					
Model Type		PC40100LFP_10Ah	PC40138LFP_12Ah	PC40138LFP_15Ah	PC40138LFP_17Ah
Weight		~ 270 g	~ 375 g	~ 390 g	~397g
Dimension		Φ40.6 × 100.0 mm	Φ40.6 × 138.8 mm	Φ40.6 × 138.8 mm	Φ40.6 × 138.8 mm
Electrical Characteristics					
Nominal Voltage		3.2 V	3.2 V	3.2 V	3.2V
Nominal Capacity		10 Ah	12 Ah	15 Ah	17Ah
Minimum Capacity		9Ah	11 Ah	13.5 Ah	15.5Ah
Internal Resistance		< 6 mΩ	< 6 mΩ	< 6 mΩ	< 6 mΩ
Energy Density	Gravimetric	120 Wh/Kg	105 Wh/Kg	130 Wh/Kg	140Wh/kg
	Volumetric	250 Wh/L	210 Wh/L	275 Wh/L	300Wh/L
Power Density	Gravimetric	1500 W/Kg	840 W/Kg	1380 W/Kg	1300 W/Kg
(at 100% SOC, 18s peak)	Volumetric	3000 W/L	1770 W/L	2950 W/L	2850W/L
Operation Conditions					
Charging Voltage		3.65 V	3.65 V	3.65 V	3.65 V
Charging Method		CC-CV	CC-CV	CC-CV	CC-CV
Cut-off Discharge Voltage		2.10 V	2.10 V	2.10 V	2.1V
Max Continuous Discharge Current		100 A	120A	150 A	170A
Max 18s Peak Current		130A	140 A	170A	175A
Max Charge Current		30A	36A	45A	50A
Operating Temperature	Discharge	-10 ~ 55˚C	-10 ~ 55˚C	-10 ~ 55˚C	-10 ~ 55˚C
Range	Charge	0 ~ 45˚C	0 ~ 45˚C	0 ~ 45˚C	0 ~ 45˚C

IEC UL Japan UL TAIWAN EXCELLENCE

Clean energy

潔淨的動力來源

技術創新、品質優先、顧客滿意、永續經營

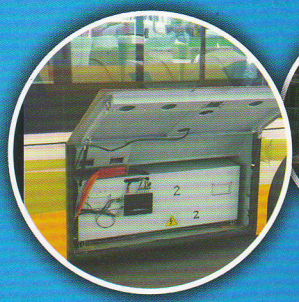

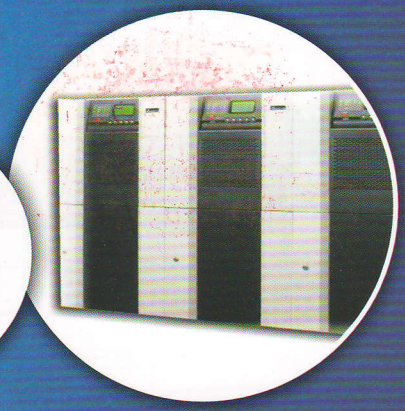

LiFePO4 Battery Product Spec.	Standard Pack			1U Module	2U Module	3U Module
	36V30Ah	24V45Ah	12V90Ah			
TAIWAN EXCELLENCE	**Physical Characteristics**					
Weight	12 Kgs			11 Kgs	16 Kgs	23 Kgs
Dimension (L*W*H)	193*264*237mm			380*483*44.5mm	380*483*89mm	400*483*134mm
Electrical Characteristics						
Nominal Battery Capacity	30Ah	45Ah	90Ah	15Ah	30Ah	45Ah
Battery Capacity (5hr rate)	30.8Ah	46.2Ah	92.4Ah	15.4Ah	30.8Ah	46.2Ah
Battery Capacity (0.5hr rate)	29.4Ah	44.1Ah	88.2Ah	14.7Ah	29.4Ah	44.1Ah
Battery Capacity (5hr rate)	1220Wh	1220Wh	1220Wh	813Wh	1630Wh	2440Wh
Nominal Battery Voltage	39.6V	26.4V	13.2V	52.8V	52.8V	52.8V
Charging Voltage	43.8V	29.2V	14.6V	58.4V	58.4V	58.4V
Cut-Off Voltage	"Level I Warning:2.6V±10%(Siren), Level II Warning:2.0V±10%(LVP light on, Siren), Level III Warning:1.9V±10%(LVP light on, Siren), Protection release: 2.8V"			38.4V	38.4V	38.4V
Max. Continuous Discharging Current	300 Amp	450 Amp	600 Amp	36A	36A	36A
Battery Volume Energy Density	100 Wh/L			100 Wh/L	100 Wh/L	95 Wh/L
Battery Weight Energy Density	100 Wh/Kg			74 Wh/Kg	102 Wh/kg	106 Wh/Kg
Communications	RS232			RS485		

[註] 電池組電壓/容量可以依客戶需求之規格不同做修改

Standard Pack

1U Module

2U Module

3U Module

UL Japan

昇陽國際半導體股份有限公司
Phoenix Silicon International Corporation
www.psi.com.tw

總部 新竹市科學園區力行路6號6樓 **香山廠** 新竹市中華路六段1號G棟
Tel.+886-3-5641888 Fax.+886-3-5670888
6F, No.6, Li-Hsin Road, Science Park, Hsinchu,30078, Taiwan.
e-mail：energy@psi.com.tw